Menu

INTERPUMP GROUP

Pratissoli

KT16 - KT18 - KT20 - KT22
WK525 - WK530

Repair manual

INDEX

1. INTRODUCTION **3**

2. REPAIR GUIDELINES **3**

2.1 Repairing mechanical parts 3
2.1.1 Disassembly of mechanical parts 4
2.1.2 Reassembly of mechanical parts 6
2.1.3 Reduction classes 8
2.1.4 Disassembly / Reassembly of bearings and shims 8
2.2 Repairing hydraulic parts 11
2.2.1 Dismantling the head – valve units 11
2.2.2 Reassembling the head – valve units 13
2.2.3 Dismantling the head – seals 15
2.2.4 Dismantling the piston unit 16
2.2.5 Reassembling the head – seals – piston unit 17

3. SCREW TIGHTENING CALIBRATION **18**

4. REPLACING THE CON-ROD FOOT BUSH **19**

5. REPAIR TOOLS **20**

1. INTRODUCTION

This manual describes the instructions for repair of the KT-WK HIGH PRESSURE version pump and should be carefully read and understood before any intervention on the pump.
Proper pump operation and duration depend on the correct use and maintenance.
Interpump Group disclaims any responsibility for damage caused by negligence or failure to observe with the standards described in this manual.

2. REPAIR GUIDELINES

2.1 Repairing mechanical parts

Mechanical parts must be repaired after the oil has been removing from the casing.
To remove oil, you must remove: the oil dipstick, pos.① and then the plug, pos.② , fig. 1.

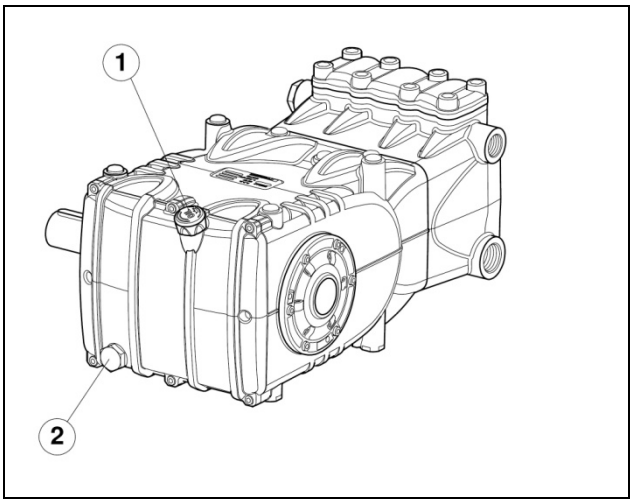

fig. 1

The oil must be placed in a suitable container and disposed of in special centres.
It absolutely should not be discarded into the environment.

2.1.1 Disassembly of mechanical parts

The operations described must be performed after removing the hydraulic part, ceramic pistons and splash guards from the pump (para. 2.2.3, 2.2.4).

Remove in the following order:

- the pump shaft tab
- the rear cover
- the con-rod cap as follows:
  unscrew the cap fixing screws, remove the con-rod caps with their lower half-bearings (fig. 2) paying attention to the numbered sequence during disassembly.

To avoid possible errors, caps and con-rod shanks have been numbered on one side (fig. 2/a, pos. 1) .

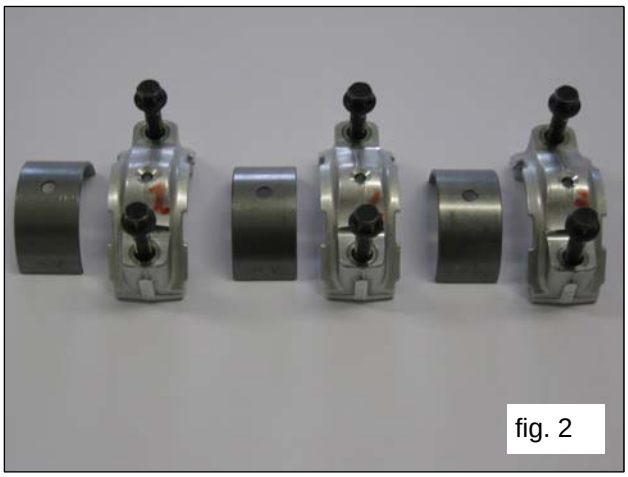
fig. 2

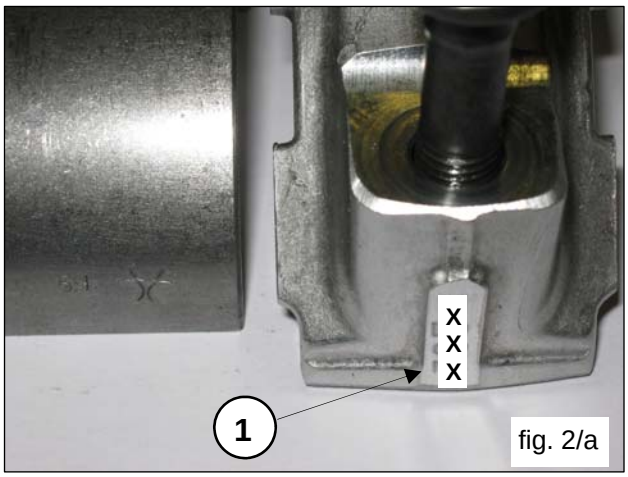

fig. 2/a

-

- the side covers using - for extraction 3 fully threaded M 6 x 50 screws, inserting them in the threaded holes as indicated in fig. 3

fig. 3

- Push the piston guides forward with their con-rods to facilitate side extraction of the pump as indicated in fig.4.

fig. 4

- Remove the pump shaft
- Complete disassembly of the con-rod units by removing them from the pump casing and removing the piston guide pins.
- Remove the pump shaft seal rings using common tools.
- Remove the piston guide seal rings as described below:

Use the extractor, code 26019400 (fig. 5, pos. 1) and the gripper, code 27503800 (fig. 5, pos. 2). Insert the gripper as far as possible onto the seal ring with the aid of a hammer (fig. 5/a), subsequently screwing the extractor to the gripper, and use the extractor hammer (fig. 5/b) until the ring to be replaced is removed (fig. 5/c).

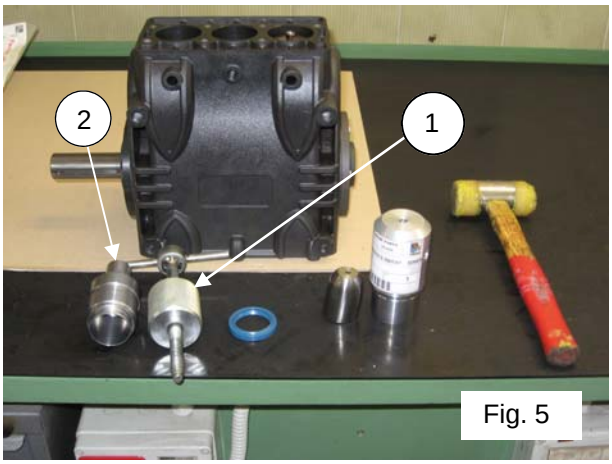

Fig. 5

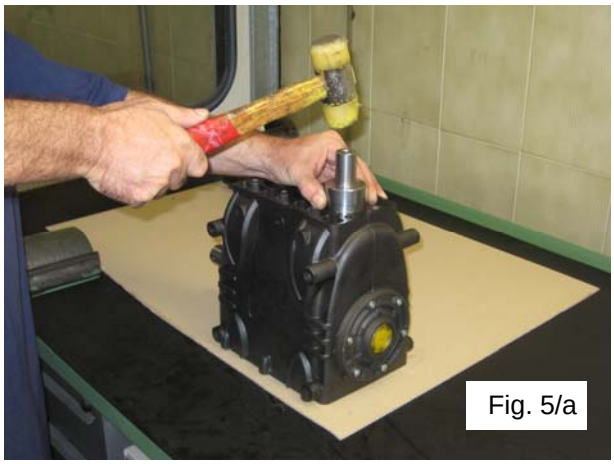
Fig. 5/a

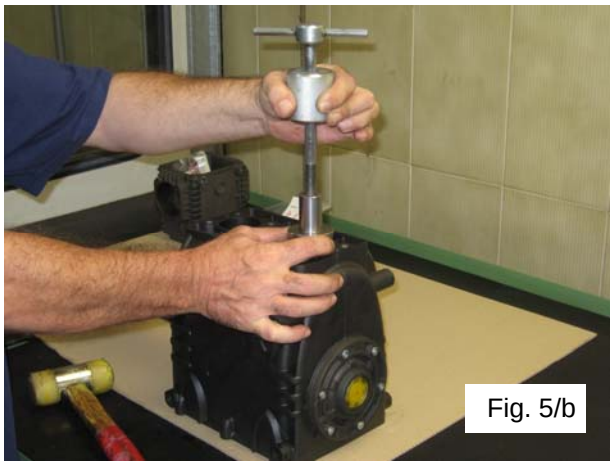
Fig. 5/b

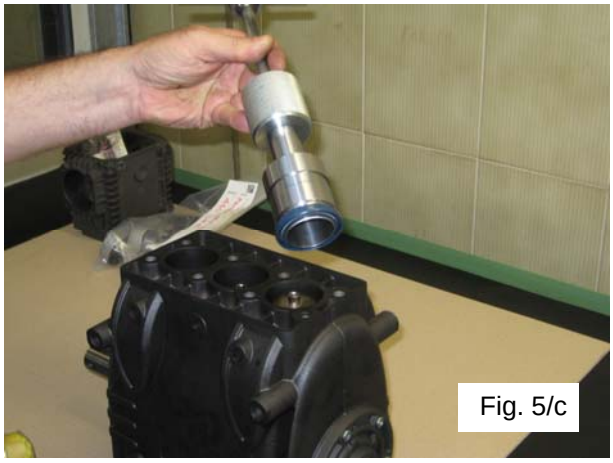
Fig. 5/c

2.1.2 Reassembly of mechanical parts

After having checked that the casing is clean, proceed with assembly of the mechanical part as described below:

- Assemble the upper and lower half-bearings in their seats in the con-rods and caps.

Make sure that the reference marks on the upper half-bearings (fig. 6, pos. 1) and lower half-bearings (fig. 6/a, pos. 2) are positioned in their respective seats in the con-rod and cap.

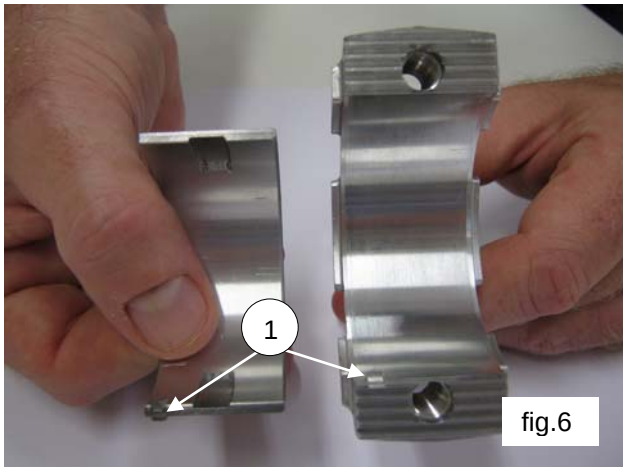

fig.6

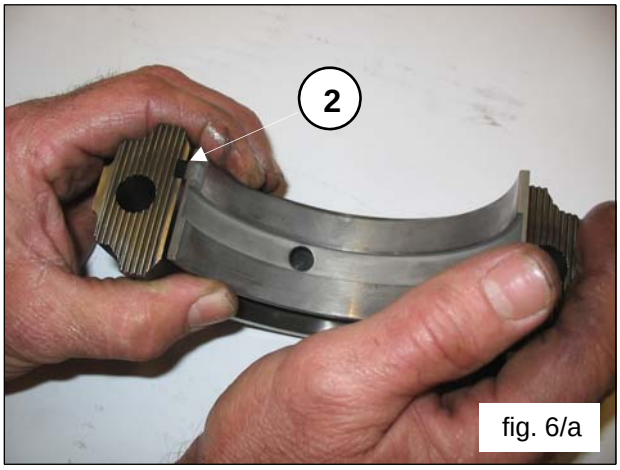

fig. 6/a

-Insert the piston/con-rod guide units into the pump casing, directing the numbering on the con-rod shank towards the top of the casing.

To facilitate pump shaft insertion (without the tab), it is essential to repeat the operation performed during disassembly, pushing the piston/con-rod guide units as far down as possible (para. 2.1.1).

-Before assembling the side cover on the PTO side, check the conditions of the radial ring lip seal and relative contact area on the shaft.

If replacement is necessary, position the new ring using a tool (code 27904500) as indicated in fig. 7.
If the pump shaft shows diametrical wear in the area of contact with the lip seal, in order to prevent the grinding operation, it is possible to reposition the ring in abutment with the cover as shown in fig. 7.
Before assembling the side covers, make sure there are O-rings on both of them and shim rings on the indicator side cover only.
To facilitate filling of the first section and relative insertion of the covers on the casing, we recommend using three partially-threaded M6 x 40 screws (fig. 8, pos.1), then completing the operation with the screws supplied (M6x16).

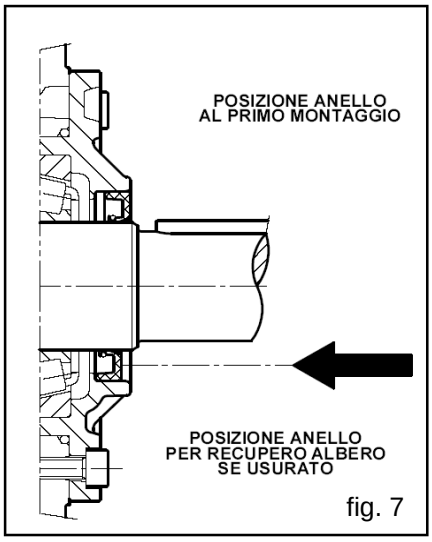

fig. 7

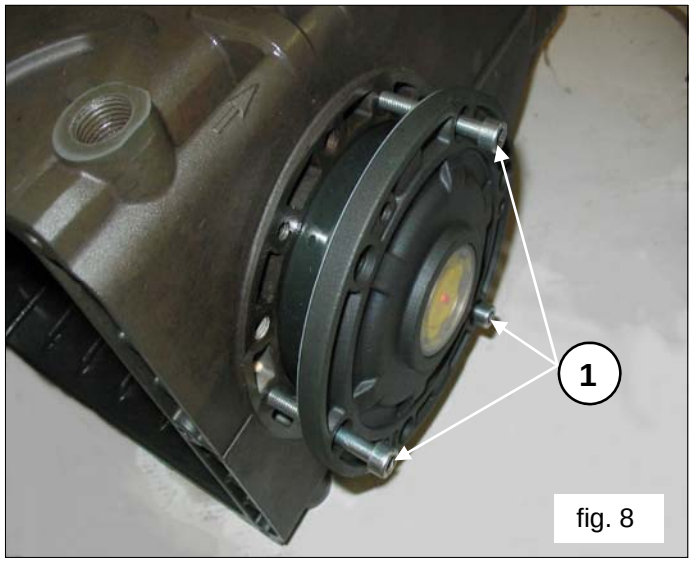

fig. 8

- Couple the con-rod caps to their shanks, referring to the numbering (fig. 9, pos.1).
Note the correct assembly direction of the caps.

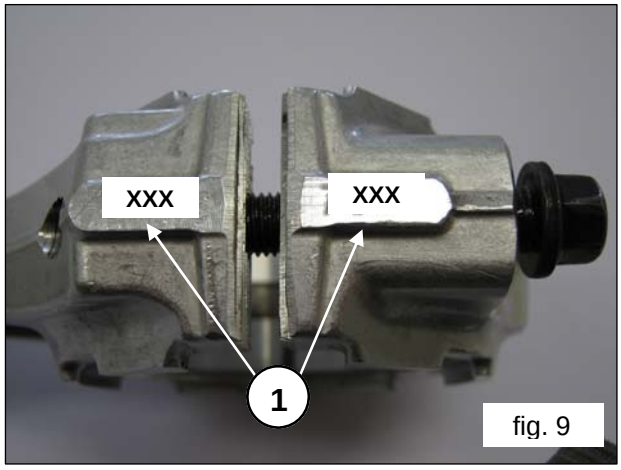

fig. 9

Fasten the caps to their respective con-rod shanks by means of M8x1x42 screws (fig. 10) lubricating both the underhead and the threaded shank, proceeding in two different stages:

1. **Manually turn the screws until they begin to tighten**
2. **Tightening torque 30 Nm**
   Alternatively, ensure:
1. **Pre-tightening torque 10-15 Nm**
2. **Tightening torque 30 Nm**

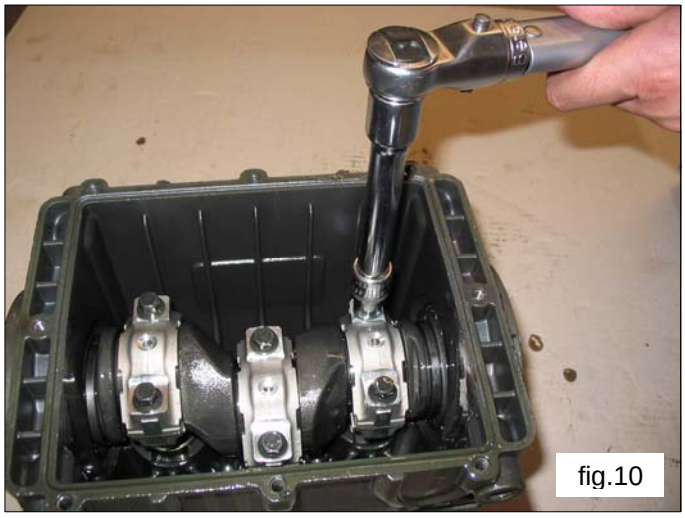
fig.10

-After having completed tightening operations, check that the con-rod head has a side clearance in both directions.

-Assemble the new piston guide seal rings with the relative seats on the pump casing (fig.11) following the procedure described:

using tool code 27904200 composed of a tapered bush and a buffer. Screw the tapered bush into the hole in the piston guide (fig. 11/a), insert the new seal ring on the buffer as far as it will go (determined by the height of the buffer) into its seat on the pump casing (fig. 11/b), remove the tapered bush (fig. 11/c).

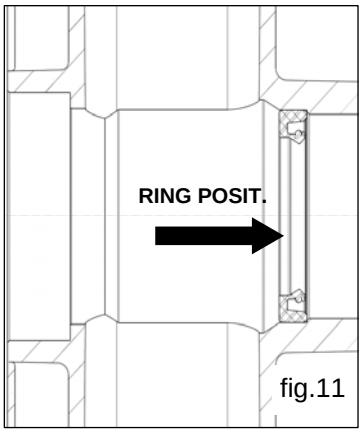

fig.11

Fig.11/a

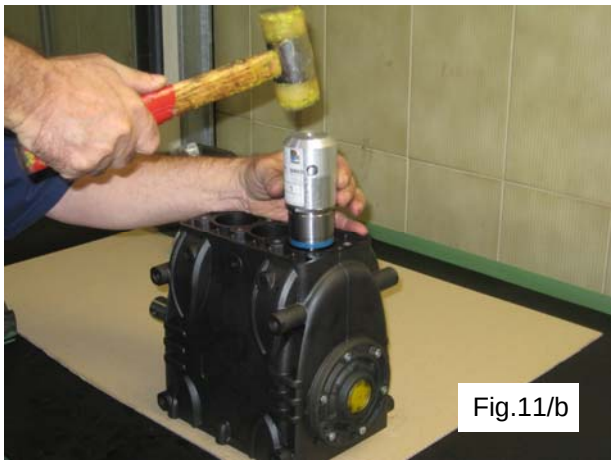
Fig.11/b

Fig.11/c

- Mount the rear cover complete with the O-ring, positioning the dipstick hole upward.
- Insert oil in the casing as indicated in the use and maintenance manual.

2.1.3 Reduction classes

TABLE OF REDUCTIONS FOR BEND SHAFTS AND CON-ROD HALF-BEARINGS			
Recovery classes (mm)	**Code Half-bearing Upper**	**Code Half-bearing Lower**	**Correction on the shaft pin diameter (mm)**
0.25	90922100	90922400	Ø39.75 0/-0.02 Ra 0.4 Rt 3.5
0.50	90922200	90922500	Ø39.50 0/-0.02 Ra 0.4 Rt 3.5

2.1.4 Disassembly / Reassembly of bearings and shims

The type of bearings (taper roller) ensures the absence of axial clearance on the bend shaft.
The shims are defined to meet this necessity. For disassembly / reassembly and for any replacements, carefully observe the following directions:

A) Disassembly / Reassembly of the bend shaft without bearings replacement

After having removed the side covers as indicated in point 2.1.1, check the conditions of the rollers and their relative tracks. If all parts are in good condition, clean the components carefully with a degreaser and redistribute lubricant oil uniformly.
The previous shims can be reused, taking care to insert them only under the indicator side cover.
Once the complete unit is mounted (Indicator side flange + shaft + motor side flange), check that the rotation torque of the shaft - with the con-rod disconnected **-** is a minimum 4 Nm and 6 Nm.
To bring the two side covers closer to the casing, it is possible to use three M6x40 screws for the first positioning stage as described previously fig.8, and the screws provided for final fastening.
Shaft rotation torque (with the con-rod connected) should not exceed 8 Nm.

B) Disassembly / Reassembly of the bend shaft with bearings replacement

After removing the side covers, as described above, remove the outer ring nut on the bearings from its seat on the covers, using an appropriate extractor as shown in fig. 12 and 12/a.
Remove the inner ring nut on the bearings from the two ends of the shaft, again using an appropriate extractor or, alternatively, a simple “pin punch” as shown in fig. 13.

fig.12

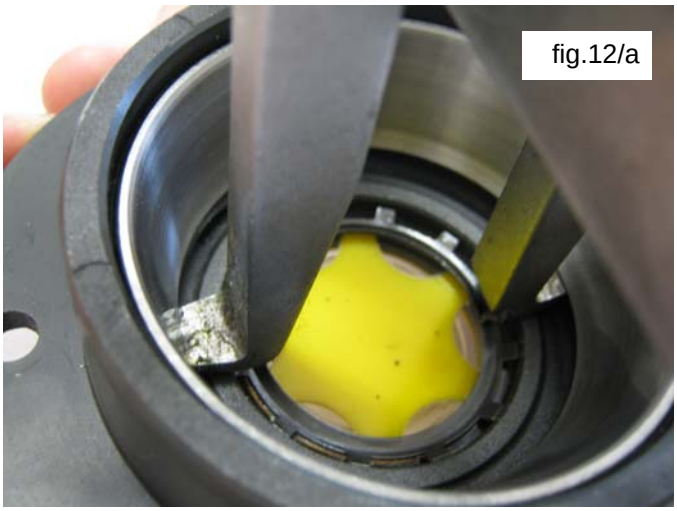
fig.12/a

fig.13

The new bearings can be mounted cold with a press or rocker, supporting it on the lateral surface of the ring nuts involved in press fitting with the rings. The press fitting operation can be facilitated by heating the involved parts to a temperature between 120° - 50° (250° - 300°), ensuring that the ring nuts go down to end stroke in their seats.

Never exchange the parts of the two bearings.

Determining the shim pack:

Perform the operation while the piston/con-rod guide units are assembled, the con-rod caps are disconnected and the con-rods are pushed downwards. Insert the bend shaft in the casing, checking that the PTO shank comes out from the provided side.
Secure the PTO side flange to the casing, taking care with the lip seal as described previously and tighten the fixing screws to the recommended torque.
Then feed the flange on the indicator side without shims in the carter and start to move it closer, manually screwing the M6x40 service screws in equally, with small rotations such as to move the cover in slowly and correctly.
At the same time, check that the shaft rotates freely by turning it manually.
Continuing the procedure in this way, a sudden increase in hardness during shaft rotation will soon be experienced.
At this point, halt the forward movement of the cover and loosen the fixing screws completely.
With the aid of a feeler gauge, measure the clearance between the side cover and pump casing (see fig. 14).

fig. 14

Proceed to determine the shim pack, using the table below:

Detected Measurement	Shim Type	# pieces
From: 0.05 to: 0.10	/	/
From: 0.11 to: 0.20	0.1	1
From: 0.21 to: 0.30	0.1	2
From: 0.31 to: 0.35	0.25	1
From: 0.36 to: 0.45	0.35	1
From: 0.46 to: 0.55	0.35 0.10	1 1
From: 0.56 to: 0.60	0.25	2
From: 0.61 to: 0.70	0.35 0.25	1 1

fig. 15

Once the type and number of shims have been determined using the table, check the following:
assemble the shim pack on the indicator side cover centring (fig. 15), secure the cover to the casing, following the procedure in para. 2.1.2 and tighten the screws to their recommended torque.
Check that the shaft rotation stall torque is between 4 Nm and 6 Nm.
If this torque is correct, connect the con-rods to the bend shaft and to the next stages. If it is not, redefine the shim pack, repeating the operations.

2.2 Repairing hydraulic parts

2.2.1 Dismantling the head – valve units

Operations are limited to inspection or replacement of valves, if necessary and, however, at the intervals indicated in the “PREVENTIVE MAINTENANCE” table in chapter 11 of the use and maintenance manual. The valve units are assembled vertically inside the head.

Operate as follows to extract them:

unscrew the 8 M14.40 valve cover fixing screws (fig.16).
Using the extractor hammer code 26019400, extract:
A) Valve plugs (fig. 17)
B) Outlet valve units (fig. 18)
C) Valve bushes (fig. 19), combined with tool code 27513600
E) Suction valve units (fig. 20)
while for the KT16-KT18-WK525-WK530 pump outlet valve units, being without threading for extraction, should they remain glued in place on the head, use a simple tool as indicated in fig.21.

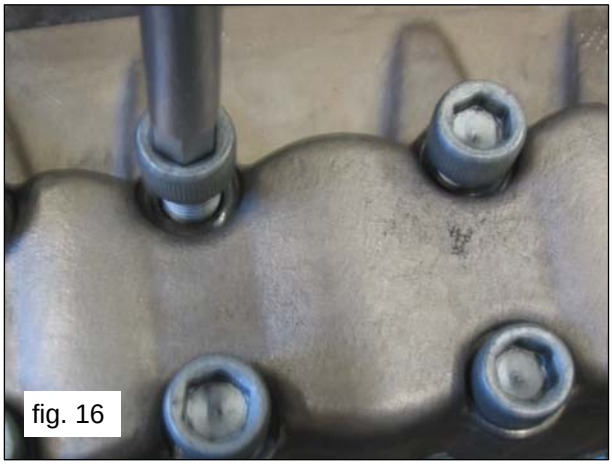
fig. 16

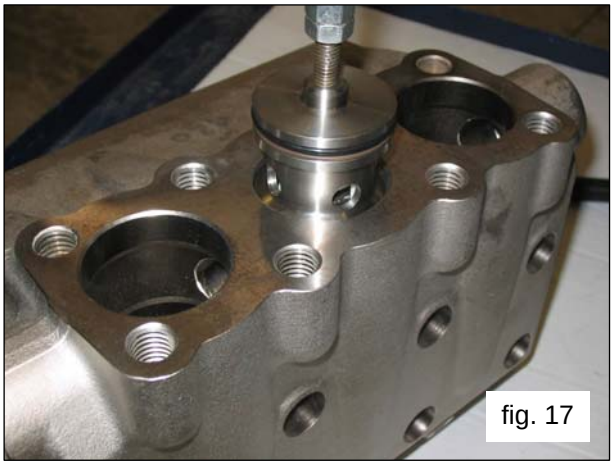
fig. 17

fig. 18

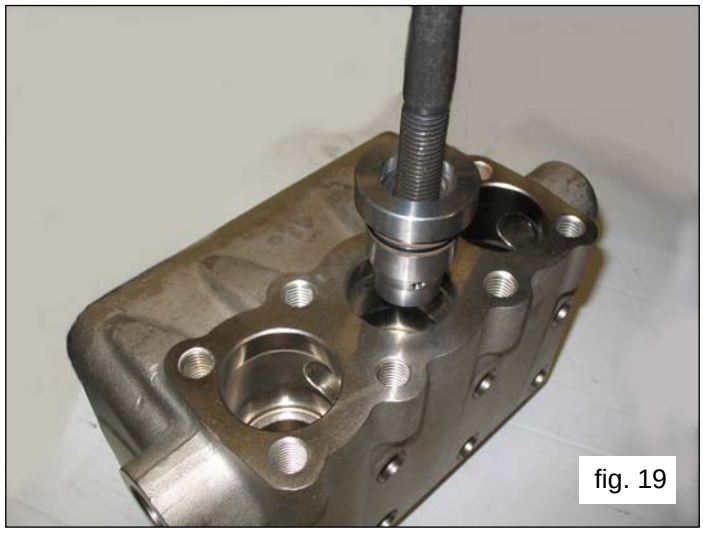
fig. 19

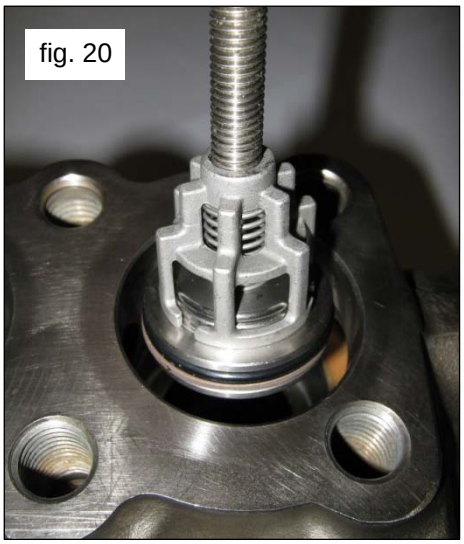
fig. 20

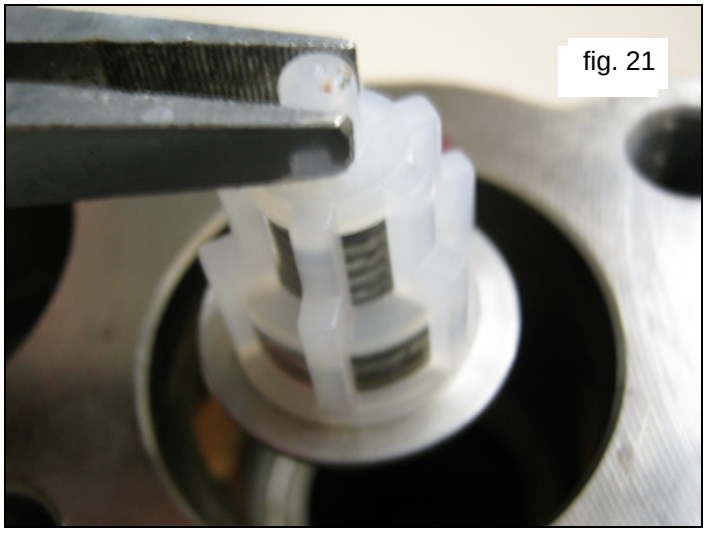
fig. 21

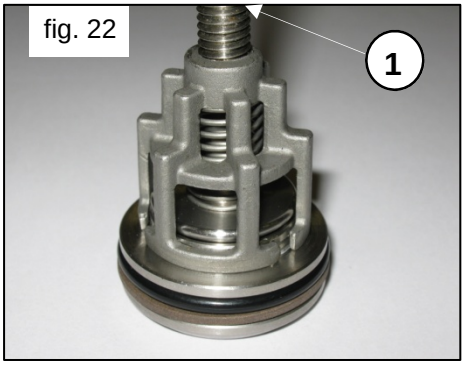

fig. 22

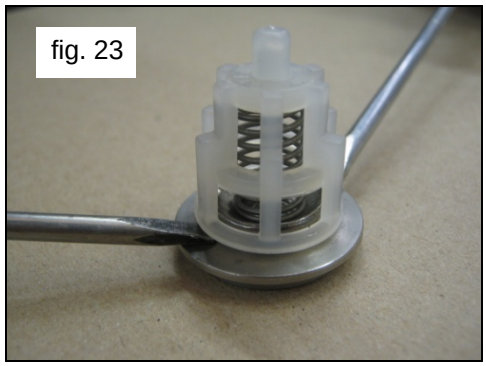
fig. 23

Disassemble the suction and outlet valve units, screwing a sufficiently long M8 screw in such a way as to be able to reach the valve plate and extract the valve guide from the seat, fig. 22, pos. 1.
If the M8 threaded holes should not be present on the valve guide, dismantling can be easily carried out by leveraging with simple tools fig. 23.

If the suction valve seats remain stuck on the head (for example scaling due to a prolonged pump inactivity), operate as follows:
For KT 16-18 versions use tools code 26019400, code 27513700, code 27513400, (fig. 23, 23/a).
For KT 20-22 versions use tools code 26019400, code 27513500, code 27513400, fig. 24, 24/a.

Note: **Before extracting from the seats, always unscrew the handle code 27513400**

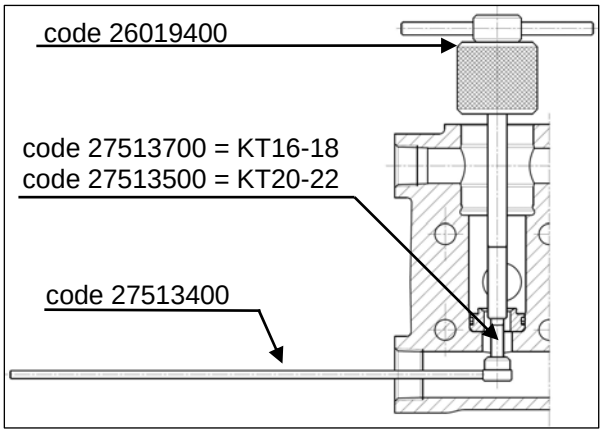

fig. 24

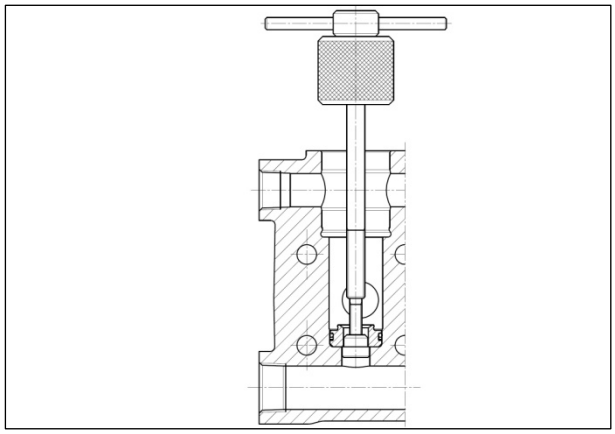
fig. 24/a

2.2.2 Reassembling the head – valve units

Pay particular attention to the conditions of the various components and replace if necessary, and at the intervals indicated in the “PREVENTIVE MAINTENANCE” table in chapter 11 of the use and maintenance manual.
At every valve inspection, replace all OR rings and all anti-extrusion rings both in the valve groups and on the valve plugs.

Before repositioning the valve unit, thoroughly clean and dry the relative seats in the head as indicated in fig. 25.

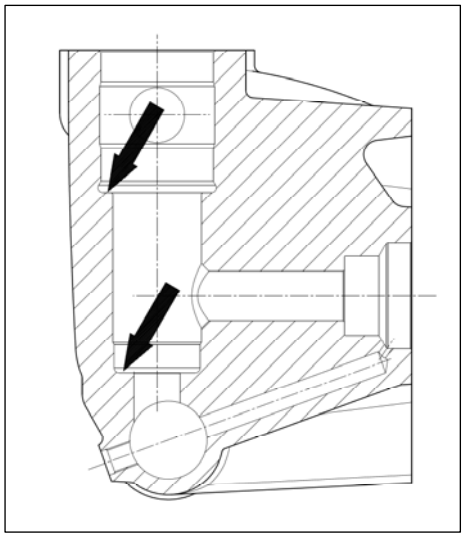

fig. 25

To reassemble the various components, follow the reverse operations listed above as described in point 2.2.1, taking particular care to:

1. **Do not invert the suction springs with the previously disassembled outlet springs fig.26, 27**
   On pumps KT20 and KT22, take special care not to invert the suction springs with the previously disassembled outlet springs:
   a) "White" suction spring
   b) "Black" outlet spring

fig. 26

fig. 27

Insert the suction and outlet valve units, checking that they are down to end stroke in the head. Take special care not to damage the anti-extrusion rings on the bushes (fig.28, pos. 3). For correct positioning and adjustment of rings in their respective seats:

- **Insert the bushes completely in the head, lubricating the external OR/anti-extrusion rings diameter with OCILIS type silicone grease code 12001600.**
- **Remove the bushes, verifying the integrity of all the anti-extrusion and OR rings.**
- **Proceed with final reassembly.**

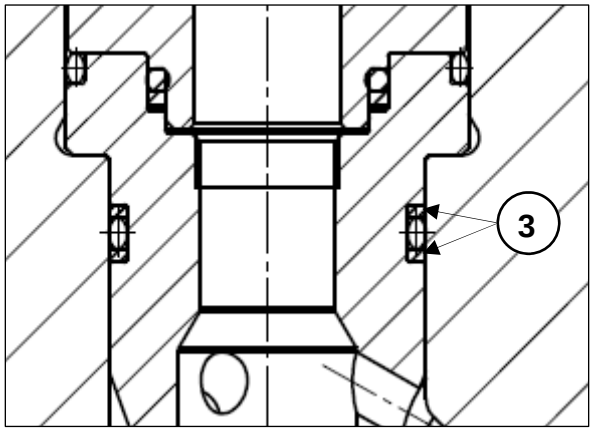

fig. 28

- **Then apply the valve covers and calibrate the respective M14x40 screws. For the values of the torques and tightening sequences follow the instructions in chapter 3.**

2.2.3 Dismantling the head – seals

Replacement of the seals is necessary from the moment you begin to detect water leaks from the drainage holes provided on the back of the pump casing, and at the intervals indicated in the “PREVENTIVE MAINTENANCE” table in chapter 11 of the use and maintenance manual.

A) Unscrew the M10x140 head fixing screws as indicated in fig. 29.

fig. 29

B) Separate the head from the pump casing.
C) Extract the high pressure seals from the head and the low pressure ones from the support, using simple tools as indicated in fig. 30, pos.1, being careful not to damage the respective housings.

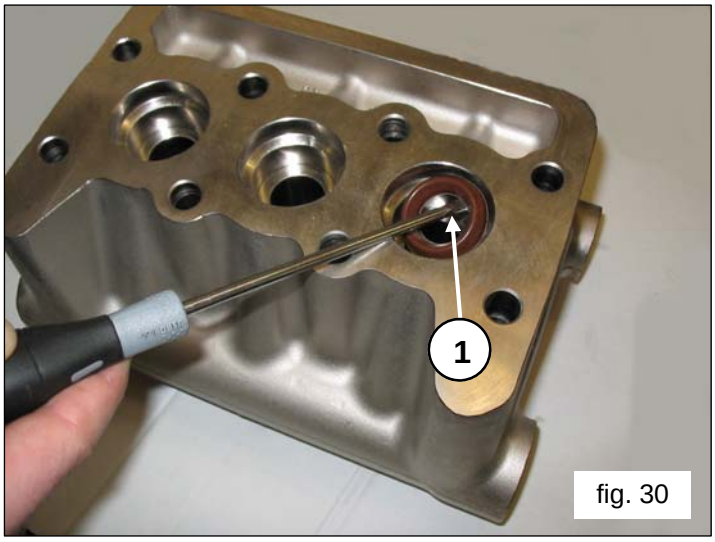

fig. 30

Pay attention to the order of seal pack disassembly as indicated in fig.31 for KT 20- KT22 version pumps and in fig.31/a for KT18 version pumps, composed of:

1. Head ring
2. HP seal
3. Restop Ring
4. Seals support
5. LP Seal
6. Seal ring
7. OR ring

fig. 31

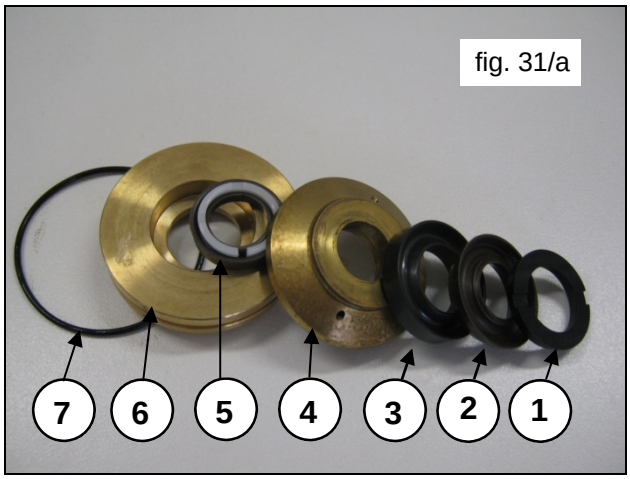

fig. 31/a

2.2.4 Dismantling the piston unit
The piston unit does not require any routine maintenance. Maintenance is limited to visual checks only.
To extract piston units: Loosen the M 7x1 piston fixing screws as indicated in fig. 32.

fig. 32

Check and verify their conditions, replace if necessary.

At every disassembly, all O-rings on the piston unit must be replaced

2.2.5 Reassembling the head – seals – piston unit

To reassemble the various components, follow the reverse operations listed above as described in point 2.2.3, taking particular care:

A) Seals pack: respect the same order used during disassembly operations.

B) Lubricate components ②③⑤ with OCILIS silicone grease code 12001600; this operation is also deemed necessary to facilitate adjustment of the lip seal on the piston.

C) For correct assembly of HP seals in their housing on the head without causing any damage to lip seals, use suitable tools according to the pump diameters as indicated in chapter 4.

D) Replace the piston, tightening the screws with a torque wrench, respecting the tightening torque value as indicated in chapter 3.

E) Replace the head as follows:

1. Position the seal supports in the respective seats on the casing.
2. Using two screws – service pins (code 27726000), fasten the casing as indicated in fig. 33. Position the complete head, making sure that it is centred only on the central piston.
3. Complete operations, following the tightening procedure. For the values of the torques and tightening sequences follow the instructions in chapter 3.

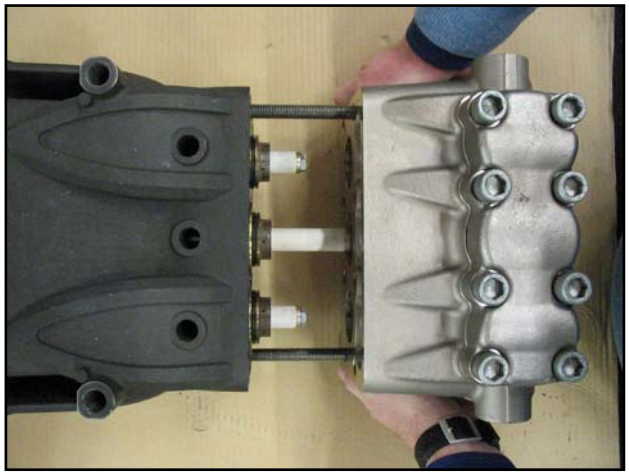

fig. 33

3. SCREW TIGHTENING CALIBRATION

Screw tightening must only be performed with a torque wrench.

DESCRIPTION	EXPLODED POSITION	TIGHTENING TORQUE (Nm)
Cover fixing screws	9	10
Oil discharge plug	11	40
Piston fixing screws	27	20
Con-rod cap fixing screws	18	30 *
Valve cover fixing screws	45	180 * * *
Head fixing screws	47	80 * *
"A" type flange fixing screws	86	22
SAE C drawbar coupling fixing screws	88	40
2nd PTO flange fixing screw	96	145* * **

* The con-rod cap fixing screws must be tightened at the same time respecting the phases indicated on page 7

** The head fixing screws explod.. Pos. 47 must be tightened with a torque wrench respecting the order shown in the diagram in fig.34.

* * * The valve cover fixing screws explod. pos. 45 must be tightened with a torque wrench respecting the order shown in the diagram in fig.34.

* * * * To fix the 2nd PTO flange, use Loctite 243 blue Code 12006400

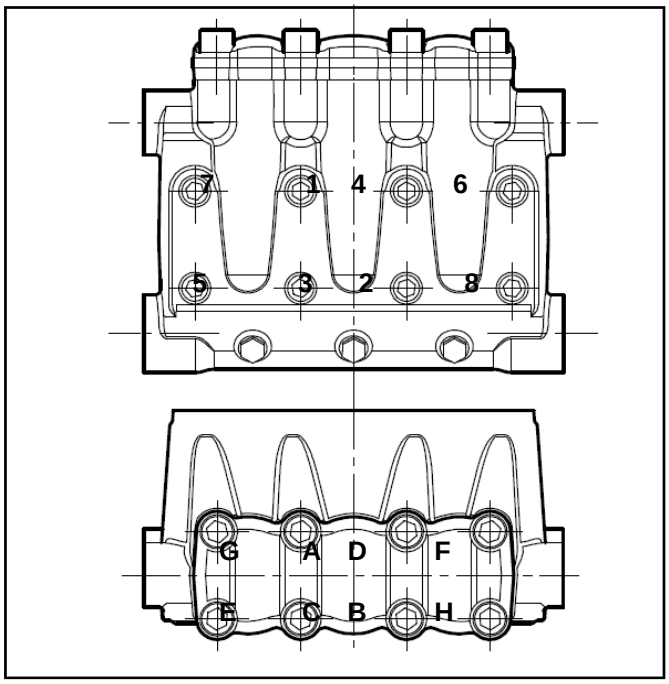

Fig. 34

4. REPLACING THE CON-ROD FOOT BUSH

During maintenance, if it becomes necessary to replace the con-rod foot bush, proceed as follows:

When removing the worn bushing, take great care not to damage or scratch the seat on the con-rod.

Perform cold press fitting of the new bush. During this operation, ensure that:

- the lubrication hole coincides with the corresponding hole on the con-rod;
- the cutting junction is directed as shown in fig. 35.

Then perform mechanical processing. The dimensions and tolerances shown in fig. 35 MUST be respected.

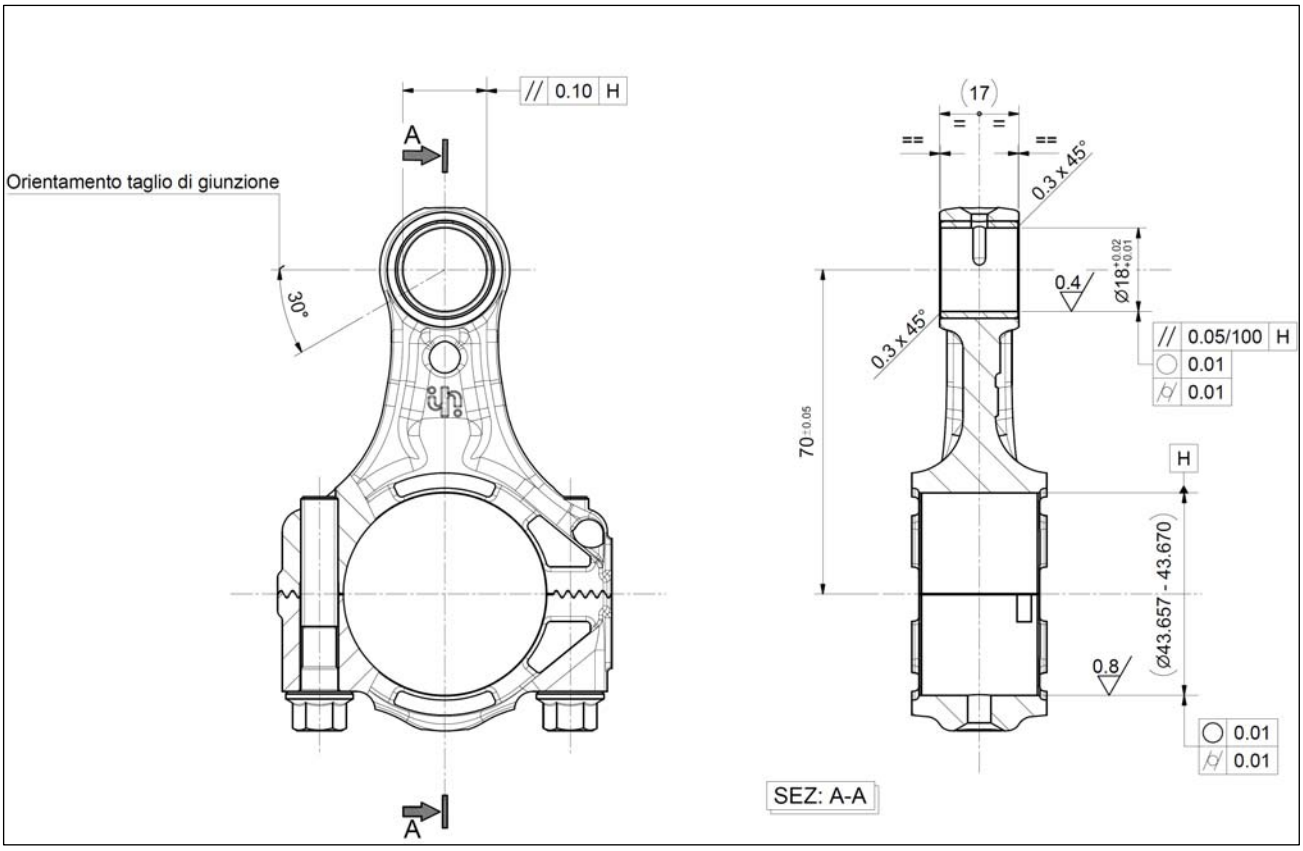

fig. 35

5. REPAIR TOOLS

Pump repairs can be facilitated by special tools coded as follows:

For assembly:

Seal bush Øe 30; HP alternative seal ring Ø 16x30x7/4	code 27704000 code 26134600
Seal bush Øe 32; HP alternative seal ring Ø 18x32x7/4.5	code 27472700 code 27385200
Seal bush Øe 35; HP alternative seal ring Ø 20x35x7.5/4.5	code 27472800 code 26134600
Seal bush Øe 35; HP alternative seal ring Ø 22x35x7/4.5	code 27472800 code 26134600
Pump shaft oil seal	code 27904500
Piston guide oil seal	code 27904200
Head	code 27726000

For disassembly phases:

Valve bush KT 16-18-WK525-WK530	code 26019400
Valve bush KT 20-22	code 26019400 code 27513600
Pump suction valve version KT 16-22-WK525	code 26019400 code 27513700 code 27513400
Pump suction valve version KT 20 – KT22	code 26019400 code 27513500 code 27513400
Outlet valves	code 26019400
Valve plugs	code 26019400
Piston guide oil seal	code 26019400 code 27503800

Copyright

Copyright of these operating instructions is property of Interpump Group.
The instructions contain technical descriptions and illustrations which may not be entirely or in part copied or reproduced electronically or passed to third parties in any form and in any case without written permission from the owner.

Violators will be prosecuted according to law with appropriate legal action.

Code 70981303 - Cod.IE 2860000143 – 02/04/2013
Data contained in this document may change without notice.

PRATISSOLI a brand of INTERPUMP GROUP S.P.A.
42049 S.ILARIO - REGGIO EMILIA (ITALY)
Tel. ***+39 - 0522 - 904311*** Fax ***+39 - 0522 - 904444***
E-mail: info@pratissolipompe.com
http://www.pratissolipompe.com